Instruction Leaflet **IL01301044E**

Supersedes July 2011
Effective January 2019

Power Defense – ICCB

IP20 drawout safety shutters – RF

Instructions apply to:

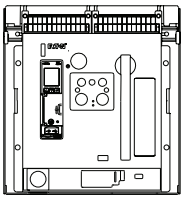

UL489 : **PD-RF**

IEC : **PD-RF, IZMX40**

⚠ WARNING

(1) ONLY QUALIFIED ELECTRICAL PERSONNEL SHOULD BE PERMITTED TO WORK ON THE EQUIPMENT.
(2) ALWAYS DE-ENERGIZE PRIMARY AND SECONDARY CIRCUITS IF A CIRCUIT BREAKER CANNOT BE REMOVED TO A SAFE WORK LOCATION.
(3) DRAWOUT CIRCUIT BREAKERS SHOULD BE LEVERED (RACKED) OUT TO THE DISCONNECT POSITION.
(4) ALL CIRCUIT BREAKERS SHOULD BE SWITCHED TO THE OFF POSITION AND MECHANISM SPRINGS DISCHARGED.
FAILURE TO FOLLOW THESE STEPS FOR ALL PROCEDURES DESCRIBED IN THIS INSTRUCTION LEAFLET COULD RESULT IN DEATH, BODILY INJURY, OR PROPERTY DAMAGE.

⚠ WARNING

THE INSTRUCTIONS CONTAINED IN THIS IL AND ON PRODUCT LABELS HAVE TO BE FOLLOWED. OBSERVE THE FIVE SAFETY RULES:
– DISCONNECTING
– ENSURE THAT DEVICES CANNOT BE ACCIDENTALLY RESTARTED
– VERIFY ISOLATION FROM THE SUPPLY
– EARTHING AND SHORT-CIRCUITING
– COVERING OR PROVIDING BARRIERS TO ADJACENT LIVE PARTS
DISCONNECT THE EQUIPMENT FROM THE SUPPLY. USE ONLY AUTHORIZED SPARE PARTS IN THE REPAIR OF THE EQUIPMENT. THE SPECIFIED MAINTENANCE INTERVALS AS WELL AS THE INSTRUCTIONS FOR REPAIR AND EXCHANGE MUST BE STRICTLY ADHERED TO PREVENT INJURY TO PERSONNEL AND DAMAGE TO THE SWITCHBOARD.

Power Defense™

Powering Business Worldwide

Note: The content of this IL applies to both PXR and Digitrip equipped breakers. Appearance of product may vary.

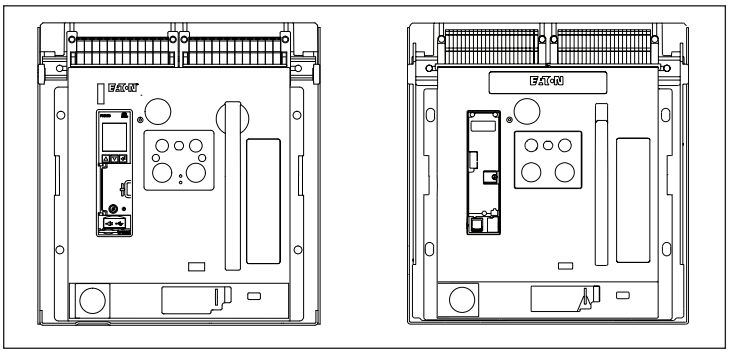

Section 1: General information

Cassette safety shutters are insulating type shutters tested to IP20 protection. They operate automatically to cover a cassette's fixed primary contacts when the breaker is not in the CONNECT position (Figure 1). Provisions are provided for padlocking the shutters in the closed position.

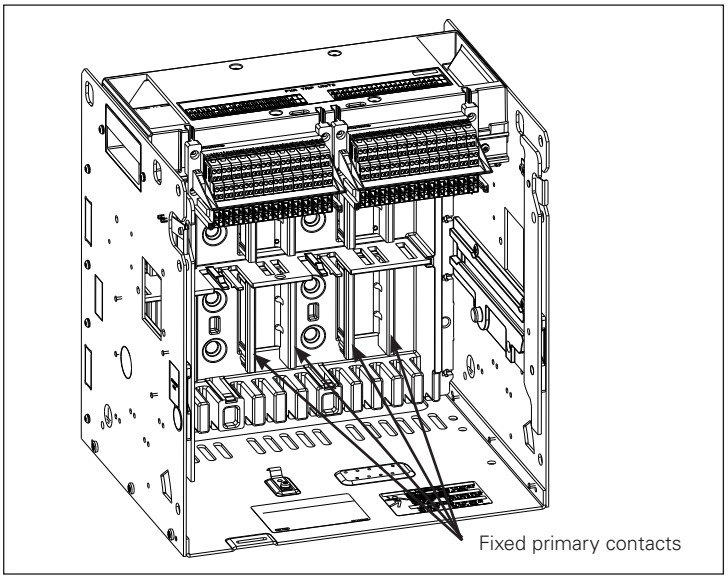

Figure 1. Drawout cassette (front view, shutters open).

A complete drawout cassette shutter installation is comprised of two duplicate, already assembled, shutter assemblies (Figure 2). Become familiar with the shutter assemblies provided.

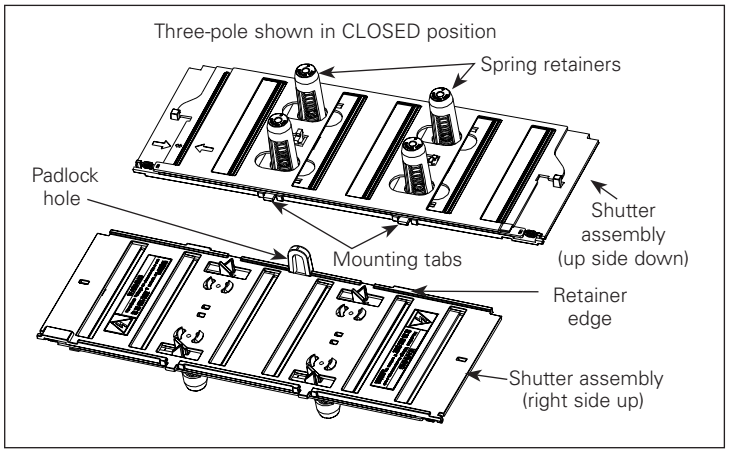

Figure 2. Shutter assemblies.

The two interchangeable shutter assemblies are installed in the rear backplane (Figure 3). The backplane is shown here removed from its cassette for clarification purposes only. Become familiar with the cassette's rear backplane.

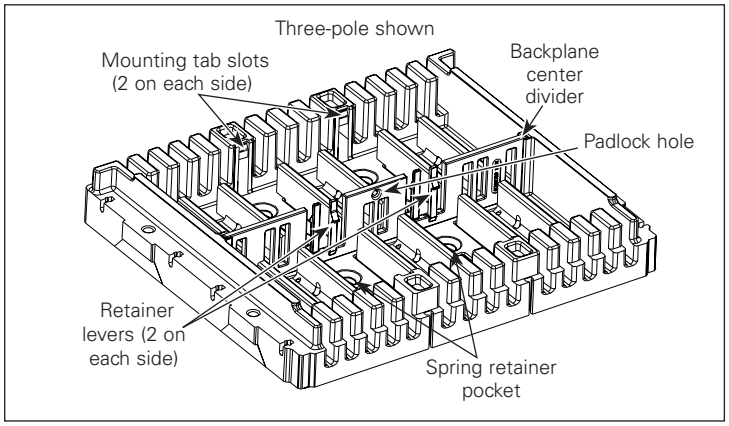

Figure 3. Rear backplane only.

Section 2: Installation of cassette safety shutter

This installation procedure will cover a three-pole installation. A four-pole installation is done in a similar fashion. Proceed with the following step for a three-pole installation:

Step 1: Note two mounting tabs located on the shutter assembly opposite the padlock hole and the shutter retainer on the opposite side (Figure 2).

It does not matter which shutter assembly is installed first, as long as the padlock hole is positioned toward the center of the backplane.

Insert either shutter assembly at an angle as shown so the mounting tabs engage small pockets in the backplane. Complete the installation by pushing down on the other end of the shutter assembly until the shutter retainer edge engages the backplane center divider, which is indicated by a click (Figure 3). Once both ends of a shutter assembly are engaged, test for a secure installation by gently tugging on the shutter assembly to ensure the proper engagement.

An installed shutter assembly will automatically return to the CLOSED position once it is not being held open.

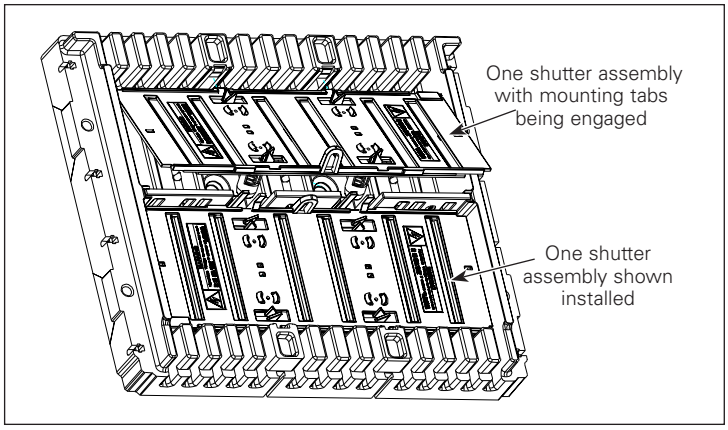

Figure 4. Shutter assembly.

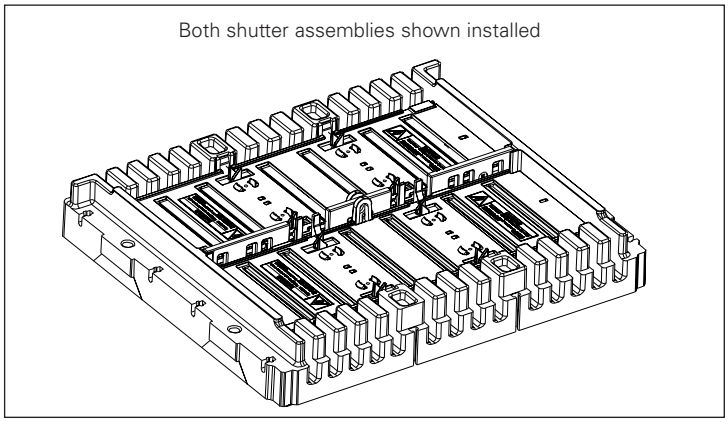

Figure 5. Shutter assemblies installed.

Section 3: Removal of cassette safety shutter

Proceed with the following step for the removal of a shutter assembly.

Step 1: Push the two retainer levers on the backplane center divider simultaneously (Figure 3) away from the shutter assembly being removed to release the retainer edge. The shutter assembly can be lifted up and out, once both tabs are released.

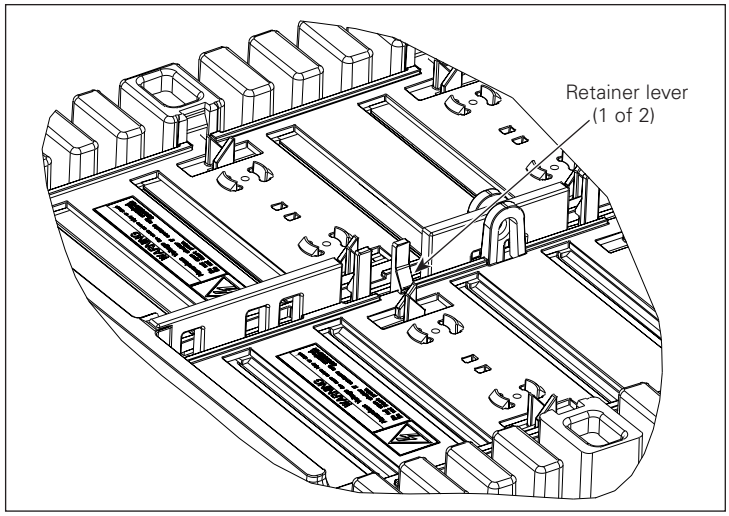

Figure 6. Retainer tabs.

Disclaimer of warranties and limitation of liability

The information, recommendations, descriptions, and safety notations in this document are based on Eaton Corporation's ("Eaton") experience and judgment, and may not cover all contingencies. If further information is required, an Eaton sales office should be consulted.

Sale of the product shown in this literature is subject to the terms and conditions outlined in appropriate Eaton selling policies or other contractual agreement between Eaton and the purchaser.

THERE ARE NO UNDERSTANDINGS, AGREEMENTS, WARRANTIES, EXPRESSED OR IMPLIED, INCLUDING WARRANTIES OF FITNESS FOR A PARTICULAR PURPOSE OR MERCHANTABILITY, OTHER THAN THOSE SPECIFICALLY SET OUT IN ANY EXISTING CONTRACT BETWEEN THE PARTIES. ANY SUCH CONTRACT STATES THE ENTIRE OBLIGATION OF EATON. THE CONTENTS OF THIS DOCUMENT SHALL NOT BECOME PART OF OR MODIFY ANY CONTRACT BETWEEN THE PARTIES.

In no event will Eaton be responsible to the purchaser or user in contract, in tort (including negligence), strict liability, or otherwise for any special, indirect, incidental, or consequential damage or loss whatsoever, including but not limited to damage or loss of use of equipment, plant or power system, cost of capital, loss of power, additional expenses in the use of existing power facilities, or claims against the purchaser or user by its customers resulting from the use of the information, recommendations, and descriptions contained herein.

The information contained in this manual is subject to change without notice.

Eaton
Electrical Sector
1000 Eaton Boulevard
Cleveland, OH 44122
United States
877-ETN-CARE (877-386-2273)
Eaton.com

© 2019 Eaton
All Rights Reserved
Printed in USA
Publication No. IL01301044E / LNT12
Part Number: IL01301044EH03
January 2019

Powering Business Worldwide

Eaton is a registered trademark.

All other trademarks are property of their respective owners.