Series NRX type RF rear primary adapter installation and removal instructions

Instructions apply to:

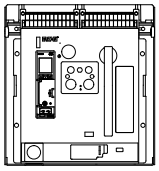

UL489 series NRX RF frame
IEC IZMX40

⚠ WARNING

(1) ONLY QUALIFIED ELECTRICAL PERSONNEL SHOULD BE PERMITTED TO WORK ON THE EQUIPMENT.
(2) ALWAYS DE-ENERGIZE PRIMARY AND SECONDARY CIRCUITS IF A CIRCUIT BREAKER CANNOT BE REMOVED TO A SAFE WORK LOCATION.
(3) DRAWOUT CIRCUIT BREAKERS SHOULD BE LEVERED (RACKED) OUT TO THE DISCONNECT POSITION.
(4) ALL CIRCUIT BREAKERS SHOULD BE SWITCHED TO THE OFF POSITION AND MECHANISM SPRINGS DISCHARGED.

FAILURE TO FOLLOW THESE STEPS FOR ALL PROCEDURES DESCRIBED IN THIS INSTRUCTION LEAFLET COULD RESULT IN DEATH, BODILY INJURY, OR PROPERTY DAMAGE.

⚠ WARNING

THE INSTRUCTIONS CONTAINED IN THIS IL AND ON PRODUCT LABELS HAVE TO BE FOLLOWED. OBSERVE THE FIVE SAFETY RULES:
– DISCONNECTING
– ENSURE THAT DEVICES CANNOT BE ACCIDENTALLY RESTARTED
– VERIFY ISOLATION FROM THE SUPPLY
– EARTHING AND SHORT-CIRCUITING
– COVERING OR PROVIDING BARRIERS TO ADJACENT LIVE PARTS
DISCONNECT THE EQUIPMENT FROM THE SUPPLY. USE ONLY AUTHORIZED SPARE PARTS IN THE REPAIR OF THE EQUIPMENT. THE SPECIFIED MAINTENANCE INTERVALS AS WELL AS THE INSTRUCTIONS FOR REPAIR AND EXCHANGE MUST BE STRICTLY ADHERED TO PREVENT INJURY TO PERSONNEL AND DAMAGE TO THE SWITCHBOARD.

Powering Business Worldwide

Series NRX type RF rear primary adapter installation and removal instructions

Note: The content of this IL applies to both PXR and Digitrip equipped breakers. Appearance of product may vary.

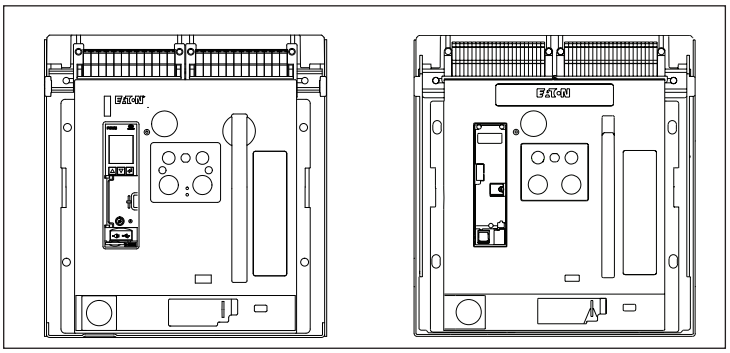

Section 1: General information

Standard flat primary terminal pads with tapped holes on the rear of a fixed breaker or drawout cassette provide for a variety of primary connection configurations. Dove tail shaped mounting slots on the cassette are provided for mounting optional rubber interphase barriers (Figure 1).

⚠ CAUTION

EVALUATE ELECTRICAL CLEARANCES INCLUDING ADAPTERS, BUS BAR, AND FASTENTING HARDWARE. INTERPHASE BARRIERS ARE AVAILABLE FROM EATON.

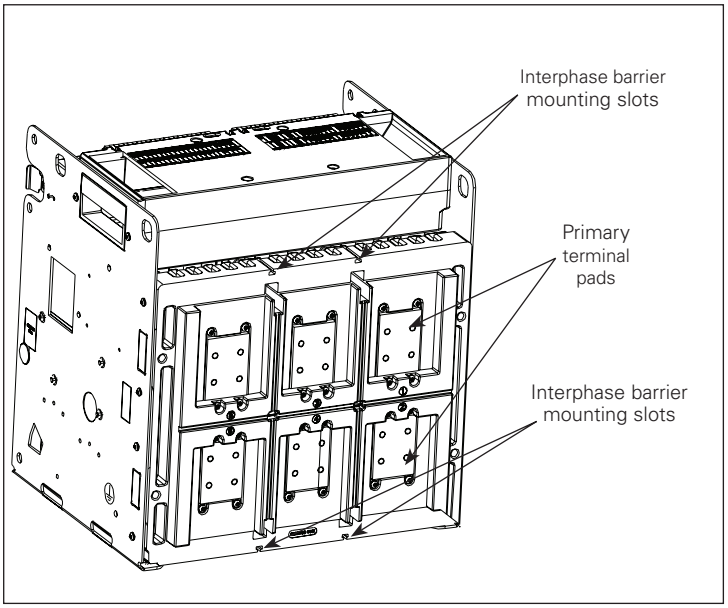

Figure 1. Three-pole cassette (rear view).

Section 2: Rear-mounted connections

⚠ CAUTION

DO NOT INSTALL MORE THAN TWO PIECES OF BUS ON EACH SIDE OF THE REAR ADAPTORS. THIS WILL VIOLATE THE REQUIRED THROUGH AIR CLEARANCES FOR THIS DEVICE AND COULD RESULT IN EQUIPMENT DAMAGE AND/OR FAILURE.

⚠ CAUTION

WHEN MAKING BOLTED CONNECTIONS TO THE EQUIPMENT OR TO THE ADAPTERS THEMSELVES, ALL WHICH HAVE PRE-TAPPED HOLES, IT IS IMPORTANT NOT TO EXCEED THE RECOMMENDED TORQUE VALUES. IN ADDITION, ANY CONNECTION HARDWARE USED SHOULD BE THE EXACT LENGTH REQUIRED AND NOT EXTEND OUT PAST THE MOUNTING HOLE. FAILURE TO FOLLOW THESE REQUIREMENTS COULD RESULT IN EQUIPMENT DAMAGE AND/OR FAILURE.

Rear adapter

Proceed with the following three steps:

Step 1: Bolt a rear adapter to the four mounting holes of a primary terminal pad as shown using the hardware provided. Torque the bolted connection to 120 in-lbs / 13,6 N•m using a torque wrench. Refer to Figure 3 for the applicable configuration.

Step 2: Complete all adapter connections in a similar fashion (see Figures 3-6).

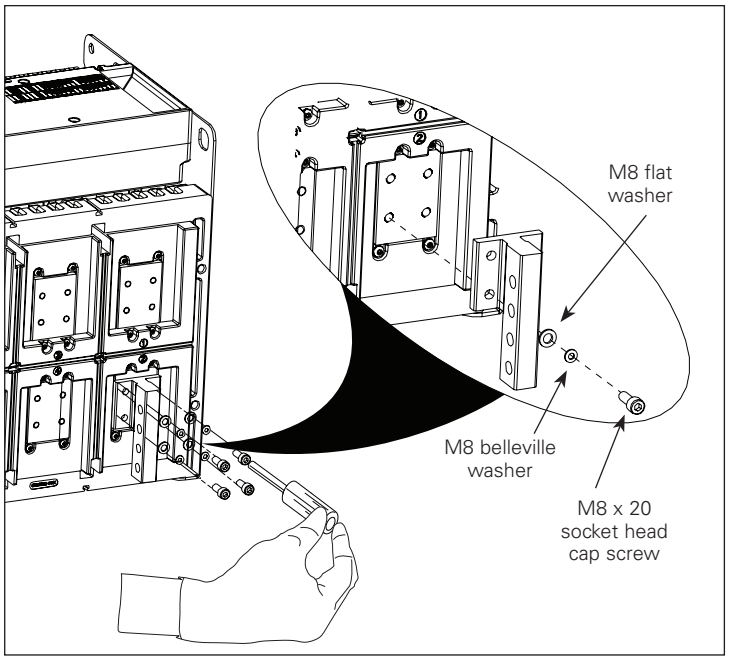

Figure 2. Step 1

Removal: Reverse the procedure just described to remove the adapters.

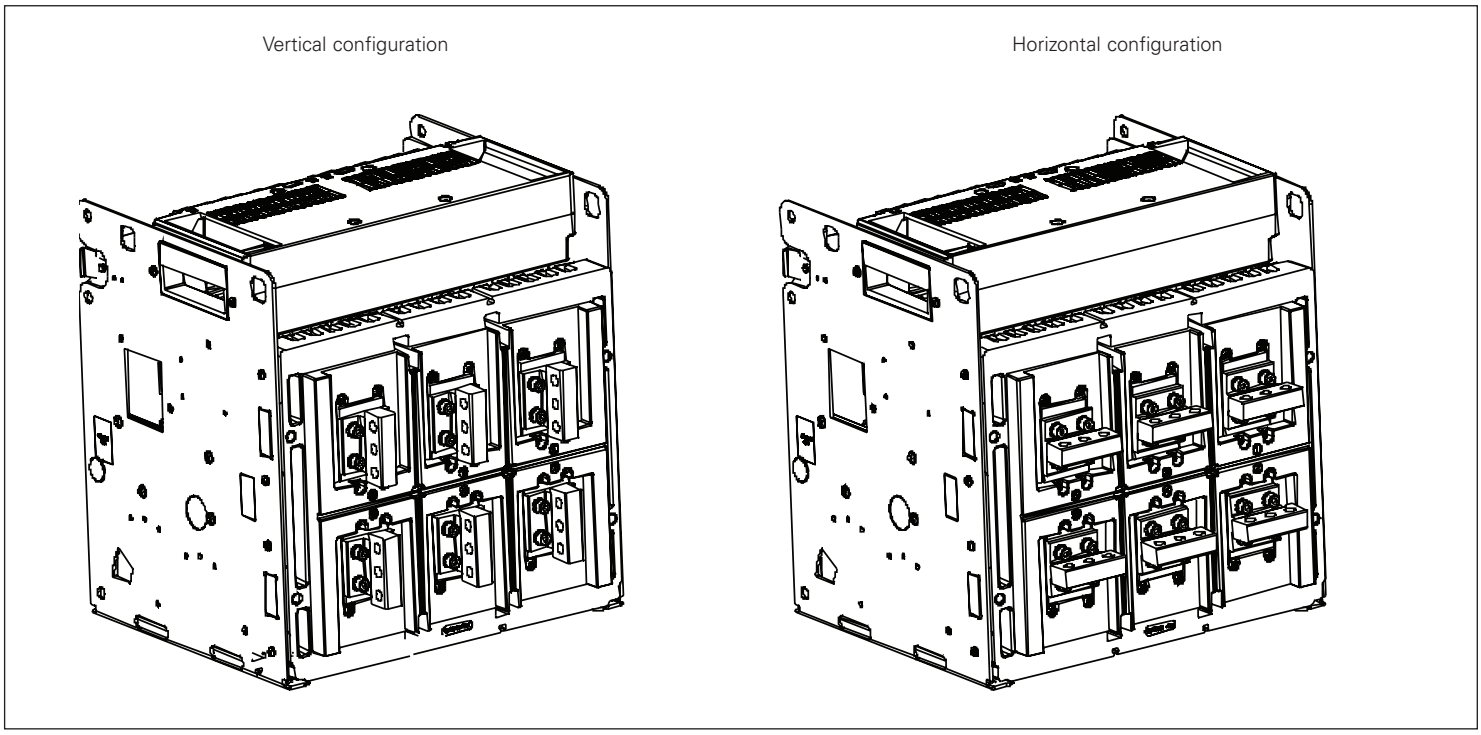

Figure 3. Step 2 - Three-pole with centered three hole rear primary adapter.

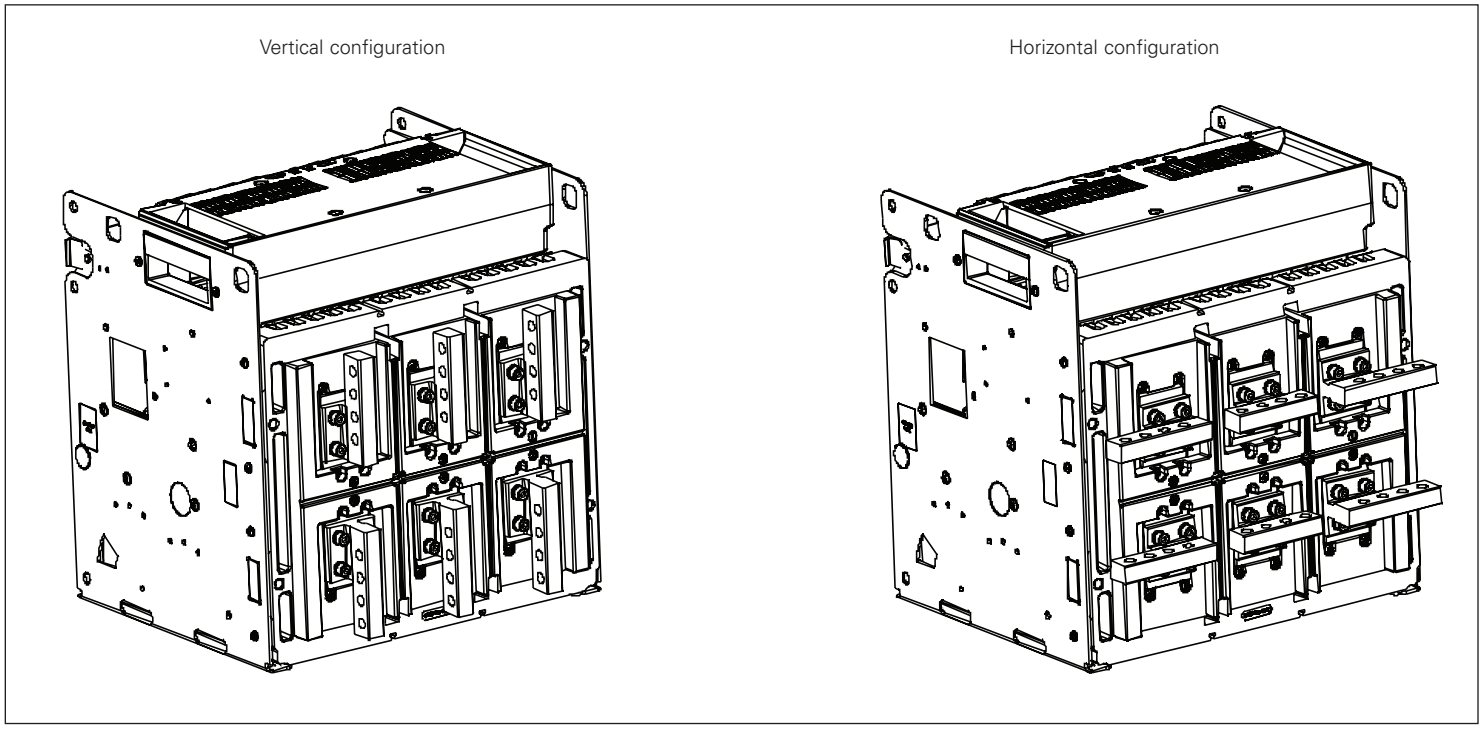

Figure 4. Step 2 - Three-pole with offset four hole rear primary adapter.

Vertical configuration

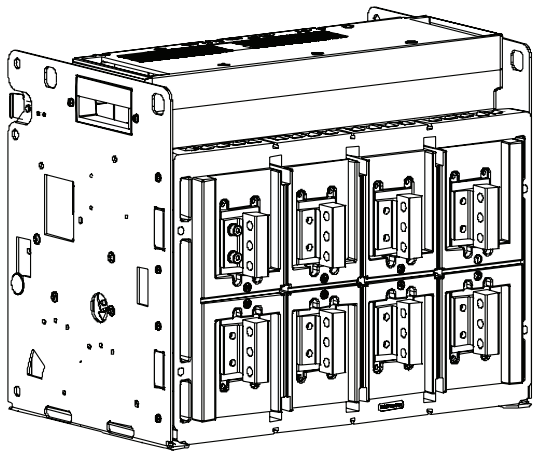

Horizontal configuration

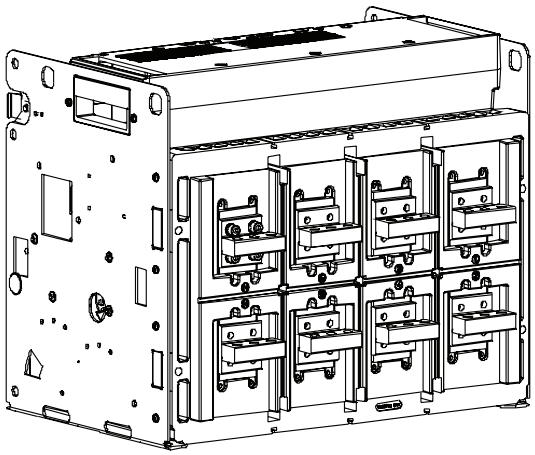

Figure 5. Step 2 - Four-pole with centered three hole rear primary adapter.

Vertical configuration

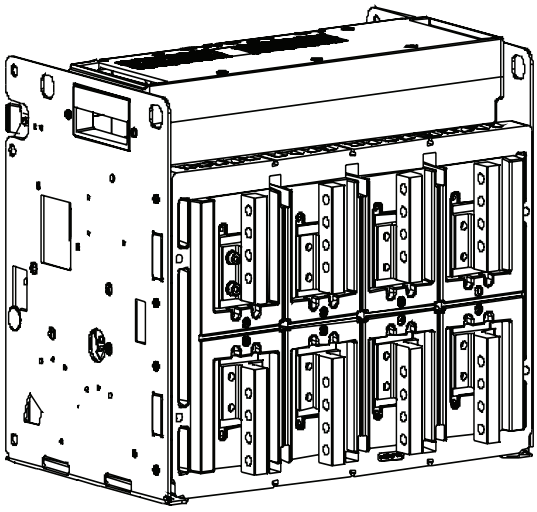

Horizontal configuration

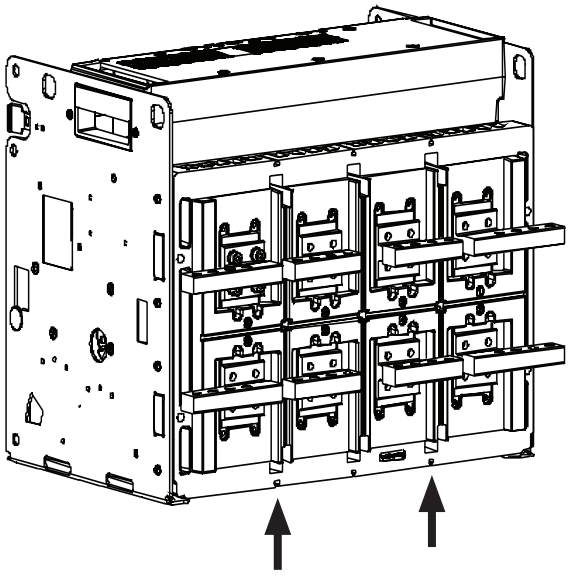

Note: Interphase barrier required to provide adapter to adapter isolation between outside and inside phases for UL applications. An interphase barrier is supplied in the UL adapter kit for this configuration.

Figure 6. Step 2 - Four-pole with offset four hole rear primary adapter.

Notes:

Disclaimer of warranties and limitation of liability

The information, recommendations, descriptions, and safety notations in this document are based on Eaton's experience and judgment, and may not cover all contingencies. If further information is required, an Eaton sales office should be consulted.

Sale of the product shown in this literature is subject to the terms and conditions outlined in appropriate Eaton selling policies or other contractual agreement between Eaton and the purchaser.

THERE ARE NO UNDERSTANDINGS, AGREEMENTS, WARRANTIES, EXPRESSED OR IMPLIED, INCLUDING WARRANTIES OF FITNESS FOR A PARTICULAR PURPOSE OR MERCHANTABILITY, OTHER THAN THOSE SPECIFICALLY SET OUT IN ANY EXISTING CONTRACT BETWEEN THE PARTIES. ANY SUCH CONTRACT STATES THE ENTIRE OBLIGATION OF EATON. THE CONTENTS OF THIS DOCUMENT SHALL NOT BECOME PART OF OR MODIFY ANY CONTRACT BETWEEN THE PARTIES.

In no event will Eaton be responsible to the purchaser or user in contract, in tort (including negligence), strict liability, or otherwise for any special, indirect, incidental, or consequential damage or loss whatsoever, including but not limited to damage or loss of use of equipment, plant or power system, cost of capital, loss of power, additional expenses in the use of existing power facilities, or claims against the purchaser or user by its customers resulting from the use of the information, recommendations, and descriptions contained herein.

The information contained in this manual is subject to change without notice.

Eaton
Electrical Sector
1000 Eaton Boulevard
Cleveland, OH 44122
United States
877-ETN-CARE (877-386-2273)
Eaton.com

© 2017 Eaton
All Rights Reserved
Printed in USA
Publication No. IL01301053E/TBG001319
Part No. IL01301053EH05
March 2017

Powering Business Worldwide

Eaton is a registered Trademark.

All other Trademarks are property of their respective owners.