FP-108B/DC

92x92x25.4mm

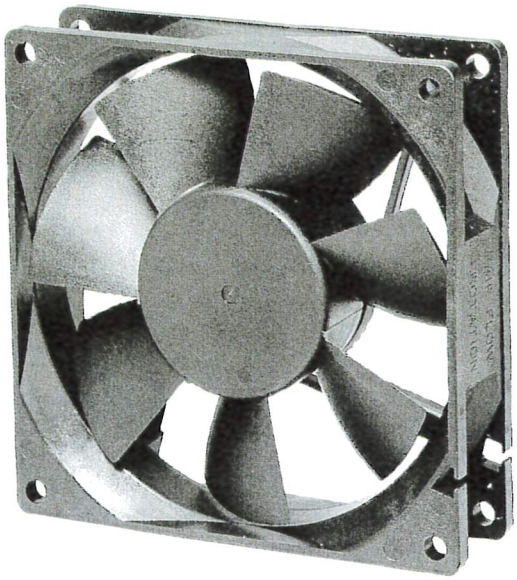

DESIGN FEATURES

*BEARING SYSTEM: SLEEVE BEARING & BALL BEARING
*IMPELLER: PLASTIC WITH FIBER GLASS FILED UL 94V-0
*HOUSING: PLASTIC WITH FIBER GLASS FILED UL 94V-0
*MOTOR: BRUSHLESS DC
*CONNECTING: WIRE LEADS
*SPEED: S-1 HIGH SPEED TYPE
S-2 MEDIUM SPEED TYPE
S-3 LOW SPEED TYPE
*AVAILABLE FG TYPE FOR SPEED SENSOR SIGNAL
*AVAILABLE RD TYPE FOR ROTOR LOCKED ALARM SIGNAL

DIMENSIONS:MM

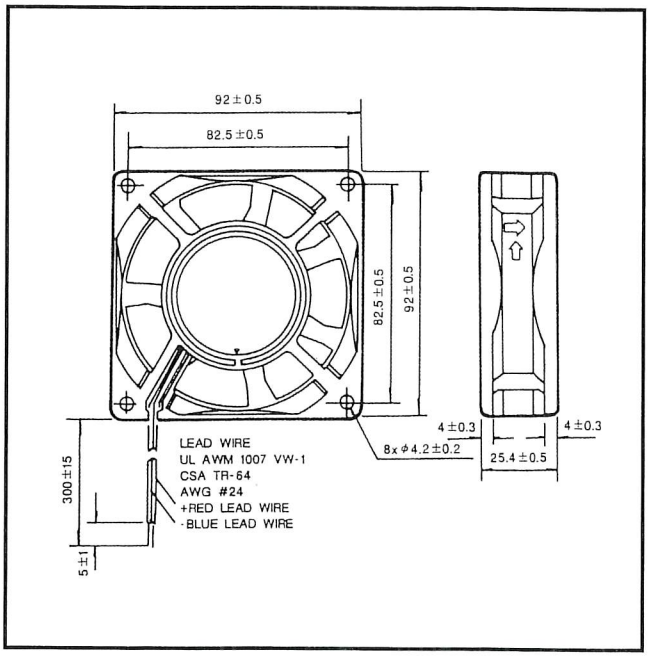

PERFORMANCE

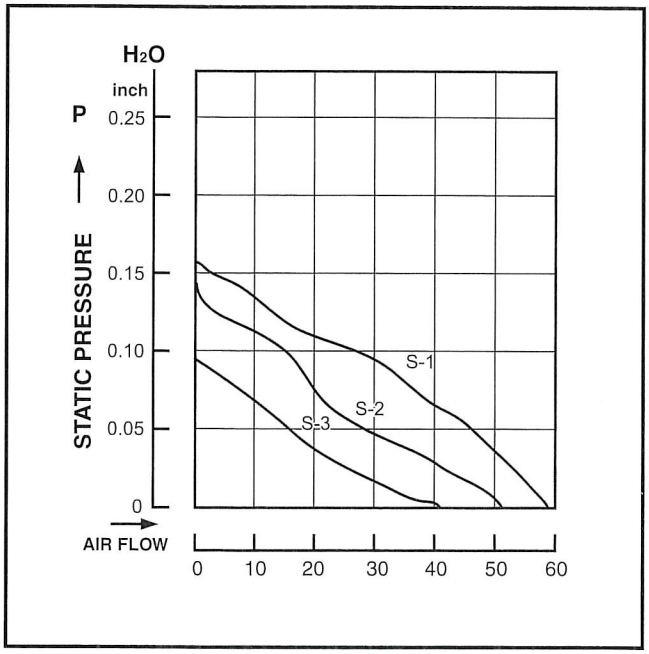

SPECIFICATIONS

Specifications are subject to change without notice

MODEL NO.	VOLTAGE (VDC)	AIR (CFM)	VOLUME (M^3/MIN)	CURRENT (A)	POWER (W)	SPEED (RPM)	STATIC PRESSURE (INCH-H_2O)	NOISE (dBA)
FP-108B/DC	12	59.0	1.67	0.32	3.84	3000	0.16	36
(S-1)	24	59.0	1.67	0.18	4.32	3000	0.16	36
FP-108B/DC	12	50.5	1.43	0.20	2.40	2500	0.14	34
(S-2)	24	50.5	1.43	0.14	3.36	2500	0.14	34
FP-108B/DC	12	41.5	1.18	0.16	1.92	2200	0.09	26
(S-3)	24	41.5	1.18	0.10	2.40	2200	0.09	26